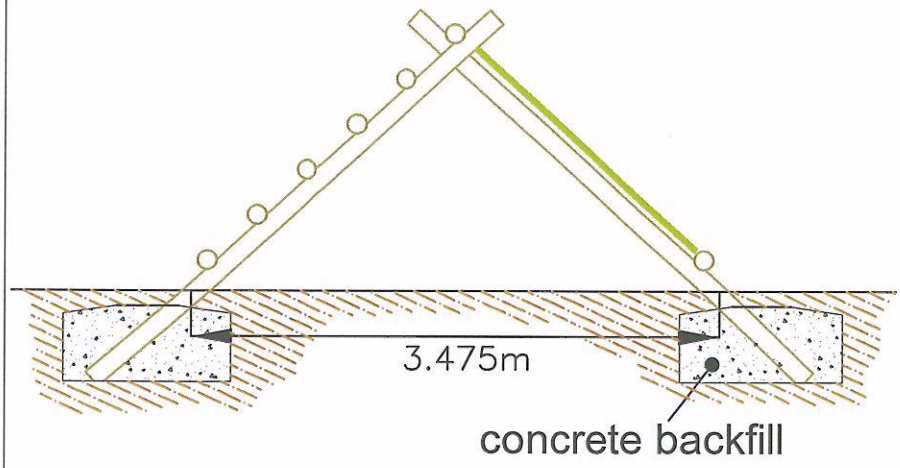


## Side Elevation

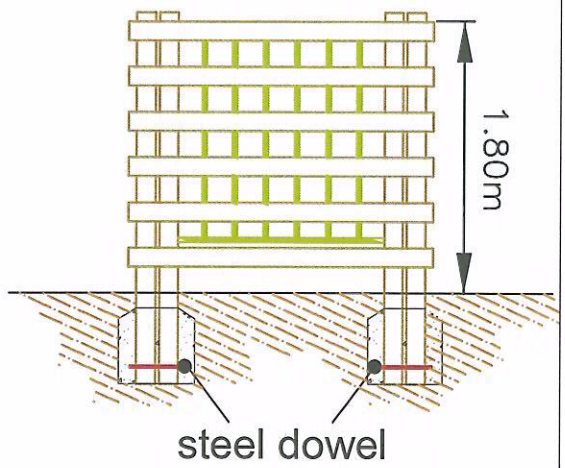


## Front Elevation

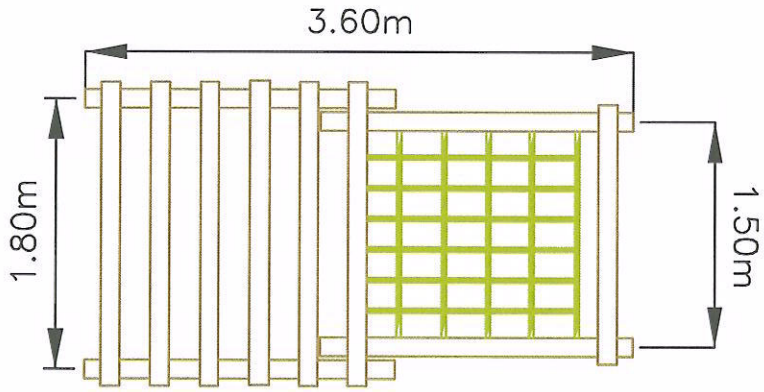


## Plan View

Boyd Sport & Play Limited
t/a **sportsequip.co.uk**
The Manor, Tur Langton,
Leicestershire, LE18 0PJ
t: 01858 545789
f: 01858 545890
Web: www.sportsequip.co.uk

| | |
|---|---|
| Product: | Net Ladder Climb |
| Ref No: | FT 922 |
| Scale: | 1 : 50 |

In accordance with the company's policy continuous development, Boyd Sport & Play Ltd t/a sportsequip.co.uk reserve the right to alter and amend specifications without prior notice. All statements in this datasheet are made in good faith but the company will not be held responsible for any consequences arising out of errors or omissions. © Copyright Boyd Sport and Play Ltd